

THE WAY A MACHINE IS BUILT
AFFECTS THE WAY IT PERFORMS

D



What began as a shared vision is today a globally operating group for CNC technology at the highest level.
Jack and Benjamin – founders, partners, doers – embody what PRIMINER stands for: technical excellence, entrepreneurial clarity and genuine trust.

PRIMINER combines the best of both worlds: efficient series production and engineering expertise from Asia – combined with German quality assurance, service ethos and market knowledge.
Our philosophy is clear: only when technology, team and customer focus work together perfectly does genuine CNC expertise emerge.

Jack Chen and Benjamin Kaehlcke
CEOs
Priminer Werkzeugmaschinen GmbH

PRIMINER GLOBAL



PRIMINER Werkzeugmaschinen GmbH | Neumünster | Germany

PRIMINER USA | Greenville, South Carolina | USA



Network of dealers and partners | Across Europe



PRIMINER South East Europe | Belgrade | Serbia

PRIMINER Machine Tools | Dongguan | China





PRIMINER Machine Tools | planned location Enping | China



PRIMINER Asia | Thailand



PRIMINER Asia | Malaysia

CONTENTS

04-09 5-Axis Machines INTRODUCTION & OVERVIEW
10-13 C-Series 5X
C500-5X, C800-5X
14-19 U-Series 5X
U500-5X, U630-5X, U800-5X, U630T-5X, U800T-5X
20-25 GT-Series 5X
GT18-5X, GT320-5X, GT420-5X, GT428-5X, GT428-5XG
26-27 PT-Flex Series
PT-Flex 2520, PT-Flex 2540
28-29 Stellaris
Stellaris P18X
30-31 Automation
32-33 Control technology
34-41 3-Axis Machines INTRODUCTION & OVERVIEW
42-45 GT-Series 3X
GT7, GT11, GT16, GT18
46-47 UHP Center
UHP900, UHP1100, UHP1300
48-51 Alpha Center
V7L, V11L, V13L, V15L
52-53 Power Center
V18
54 ShopMate V5
55-57 Delta Center
T7, V7L Lite, V10L
58-62 Portal-Center
V1613HS, V2516, V3320, V4020, V4028
63 History of PRIMINER
64-65 Ultrasonic-assisted grinding and drilling with VibroCut *ultrasonic*

5X



C-SERIES U-SERIES



GT-SERIES



PT-FLEX-SERIES STELLARIS-SERIES

5AXES.
MAXIMUM FLEXIBILITY.
UTMOST PRECISION.

Modern manufacturing is complex – geometries are becoming more demanding, tolerances tighter, machining times shorter. This is exactly where our 5-axis machining centres come in: they enable maximum precision, the greatest flexibility and a significant reduction in clamping operations. Whether in tool and mould making, the aerospace industry, medical technology or high-end prototyping – 5-axis technology opens up entirely new possibilities in machining.

PRIMINER offers you a broad portfolio of 5-axis centres – from the compact all-rounder to the highly dynamic gantry solution for large-volume workpieces. We rely on modern kinematics, direct drive technology, powerful controls and maximum machine rigidity.

Our 5-axis machines are consistently designed for performance: fast rapid traverses, precise simultaneous movements and intelligent software support make the difference – and deliver economical production results. But technology alone



Aerospace: blisk



Aerospace: engine casing

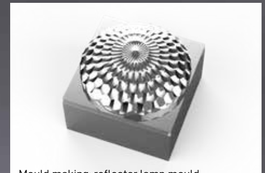

Mould making: reflector lamp mould



Mould making

is not enough. That is why we attach particular importance to well-thought-out operating concepts, maintenance-friendly design and practical equipment. This is how we create solutions that convince not only on paper, but day after day in the workshop.

PRIMINER 5-axis centres – for everyone who wants to achieve more. In record time.

5X

5-Axis Machines Overview

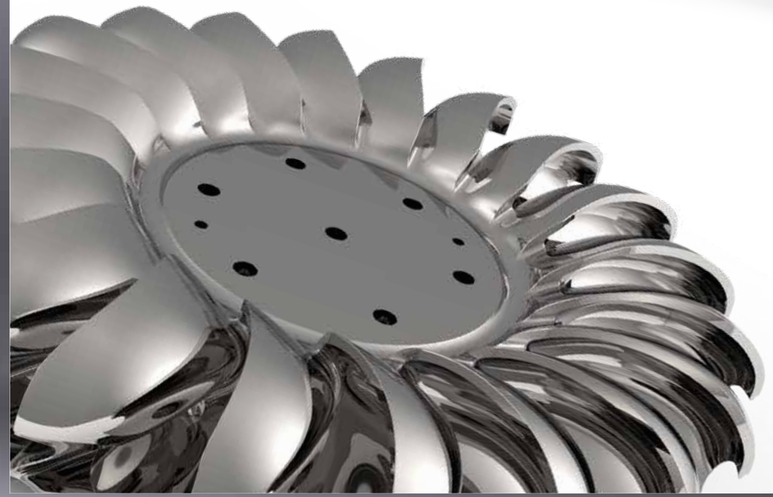



For more information, visit **www.priminer.de**

5X



C500-5X | C800-5X



U500-5X



U630-5X



U800-5X

Specifications	C500-5X		C800-5X	U500-5X	U630-5X	U630T-5X	U800-5X		U800T-5X
X/Y/Z travel	700 / 550 / 500 mm		900 / 850 / 600 mm	700 / 650 / 450 mm	850 / 875 / 550 mm		1,000 / 1,100 / 600 mm		
A/C travel	+30 ° ~ -120 °/ ± 360 °		± 120 °/ ± 360 °	+30 ° ~ -110 °/ ± 360 °	+30 ° ~ -110 ° / ± 360 °		+30 ° ~ -110 ° / ± 360 °		
Table size	Ø 500 x 400 mm		Ø 800 x 700 mm	Ø 500 mm	Ø 630 x 560 mm	Ø 630 mm	Ø 800 x 700 mm		Ø 800 mm
Max. table load	300 kg		800 kg	500 kg	800 kg	500 kg	1,200 kg		800 kg
Max. workpiece size	Ø 700 x 500 mm		Ø 900 x H 500 mm	Ø 700 x H 400 mm	Ø 850 x 550 mm		Ø 1,000 x 700 mm		
Spindle taper	BBT40/SK40/CAT40	HSK A63	HSK A63	HSK A63	HSK A63	HSK T63	HSK A100	HSK A63	HSK T63
Spindle speed	12,000 rpm	15,000 rpm	16,000 rpm	20,000 rpm	16,000 rpm	15,000 rpm	10,000 rpm	16,000 rpm	800 rpm
Spindle motor power	11 / 18.5 kW	8.5 / 33.5 kW	30/ 36 kW	20 / 24 kW	30 / 36 kW		54 / 65 kW	30 / 36 kW	30 / 36 kW
Spindle motor torque	52.5 / 118 Nm	63 / 135 Nm	100 / 120 Nm	48 / 58 Nm	100 / 120 Nm		300 / 360 Nm	100 / 120 Nm	100 / 120 Nm
CNC control	Fanuc	Siemens / Heidenhain							

The above specifications are subject to change without prior notice; no liability for errors. Machines may be shown with optional equipment.

5X



GT18-5X



GT320-5X | GT420-5X



GT428-5X | GT428-5XG

Specifications	GT18-5X	GT320-5X		GT420-5X		GT428-5X		GT428-5XG
X/Y/Z travel	1,900 / 1,400 / 800 mm	3,300 / 2,700 / 1,000 mm		4,200 / 2,700 / 1,000 mm		4,200 / 3,300 / 1,200 mm		4,200 / 3,300 / 1,200 mm
A(B)/C travel	±108 °/ ± 360 °	±108 °/ ± 360 °	±115 °/ ± 360 °	±108 °/ ± 360 °	±115 °/ ± 360 °	±110 °/ ± 360 °	±115 °/ ± 360 °	±108 °/ ± 180 °
Table size	1,800 x 1,400 mm	3,300 x 1,700 mm		4,000 x 1,900 mm		4,000 x 2,400 mm		4,000 x 2,400 mm
Max. table load	6,000 kg	10,000 kg		12,000 kg		15,000 kg		15,000 kg
Spindle taper	HSK A63	HSK A63	HSK A100	HSK A63	HSK A100	HSK A100	HSK A100	BT50
Spindle speed	24,000 rpm	24,000 rpm	15,000 rpm	24,000 rpm	15,000 rpm	12,000 rpm	15,000 rpm	4,000 rpm
Spindle motor power	30 / 35 kW	30 / 35 kW	40 / 50 kW	30 / 35 kW	40 / 50 kW	40 / 47 kW	40 / 50 kW	30 / 63 kW
Spindle motor torque	72 / 85 Nm	72 / 85 Nm	103 / 129 Nm	72 / 85 Nm	103 / 129 Nm	248 / 293 Nm	103 / 129 Nm	840 / 1760 Nm
CNC control	Siemens / Heidenhain							

The above specifications are subject to change without prior notice; no liability for errors. Machines may be shown with optional equipment.

5X



PT-Flex 2520



PT-Flex 2540



Stellaris P18X

Specifications	PT-Flex 2520		PT-Flex 2540		Stellaris P18X
X/Y/Z travel	2,000 / 2,500 / 1,000 mm (option 1,200 mm)		4,000 / 2,500 / 1,000 mm (option 1,200 mm)		3,300 (2450x2) / 1,800 / 1,200 mm
A/C travel	±108 °/ ± 360 °	±115 °/ ± 360 °	±108 °/ ± 360 °	±115 °/ ± 360 °	±115 °/ ± 360 °
Table size	2,500 x 2,000 mm		2,500 x 4,000 mm		-
Max. table load	6,000 Kg/m²		6,000 Kg/m²		-
Spindle taper	HSK A63	HSK A100	HSK A63	HSK A100	HSK A63
Spindle speed	24,000 rpm	15,000 rpm	24,000 rpm	15,000 rpm	20,000 rpm
Spindle motor power	30 / 35 kW	40 / 50 kW	30 / 35 kW	40 / 50 kW	20 / 25 kW
Spindle motor torque	72 / 85 Nm	103 / 129 Nm	72 / 85 Nm	103 / 129 Nm	35 / 42 Nm
CNC control	Siemens / Heidenhain				Siemens

The above specifications are subject to change without prior notice; no liability for errors. Machines may be shown with optional equipment.

5X

C500-5X

Bestseller

among our 5-axis machines!

NEW
Now also available with automation



approx. 10t machine weight

Standard configuration

- Rotary tilting table with Roller-Cam drive
- Direct-drive spindle 12,000 rpm
- 60-pocket chain-type tool changer, HSK A63
- Chain-type chip conveyor
- Spindle oil cooler
- Air-cond. control cabinet



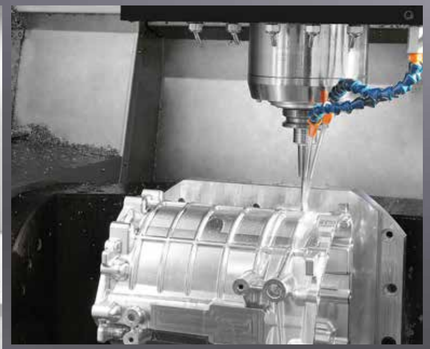



Features

- X/Y/Z axis movements are separated from the machining area
- Dual-support rotary table, high rigidity, high performance and efficiency
- A/C axes with roller cam drive
- X/Y/Z axes with direct measuring system (5-axis simultaneous as std)
- A/C axes with rotary encoders
- Available with Siemens, Heidenhain and Fanuc

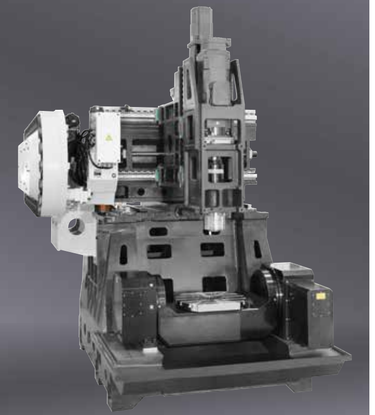

"The C500-5X reliably delivers precise results – even with complex geometries. For me as a service engineer, it is well thought out and easy to maintain."

Flemming Hahn, Service engineer



The above specifications are subject to change without prior notice; no liability for errors. Machines may be shown with optional equipment.

5X

C800-5X

5 axes for the heavy jobs.

NEW
Now also available with automation



Standard configuration

- Roller-Cam drive rotary table
- Built-in spindle HSK A63, 16,000 rpm, 30/36 kW, 100/120 Nm (Siemens & Heidenhain)
- Rotary encoders on A/C axes (Siemens & Heidenhain)
- 60-pocket chain-type tool changer, HSK A63
- Chain-type chip conveyor
- Spindle water cooler
- Air-cond. control cabinet

approx. 14.5t machine weight

Auto roof opening for crane loading



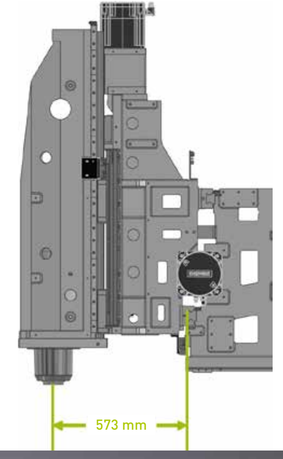

4 roller linear guides in the Y axis

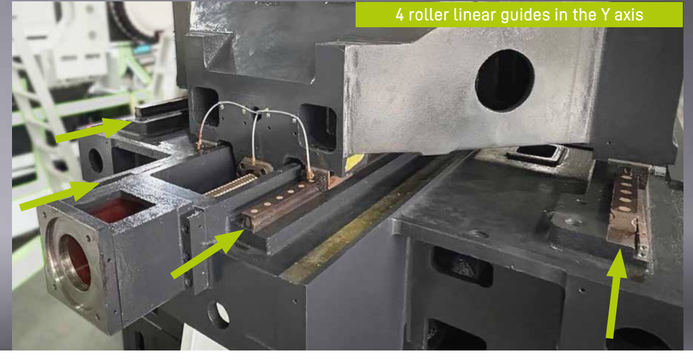

Features

- Moving beam structure that makes it easier for the operator to approach the machining area
- The X/Y/Z axis movements are separated from the machining area
- Dual-support rotary table, high rigidity, high performance and efficiency
- A/C axes with roller cam drive, high rigidity and heavy-duty machining capability
- The distance between the X-axis guideway and the spindle centre has been minimised to 573 mm, while the saddle overhang has been reduced by 34%
- Modular coolant unit with integrated filtration and chip removal devices

Compact design

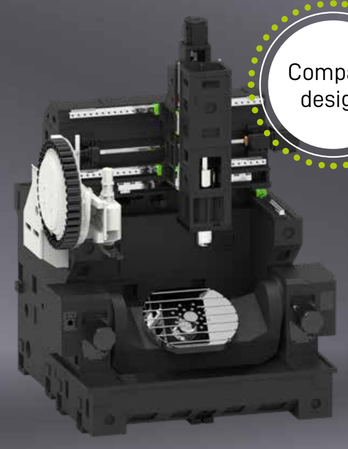

The above specifications are subject to change without prior notice; no liability for errors. Machines may be shown with optional equipment.

5X

U500-5X

Maximum precision with an optimised portal design

Features

- High dead weight thanks to Meehanite® cast body, combined with a very compact design
- Gantry design with dual-driven Y axis
- Torque motors with additional Heidenhain encoders in the A/C axes, together with the glass scales in the X/Y/Z axes, form a high-accuracy closed-loop system for the most precise positioning
- Motor spindles in various versions up to max. 32,000 rpm provide the right speed for different applications at all times

- High-precision 5-axis machining centre for medical and electrical engineering, mould making and general mechanical engineering



Highly dynamic, torque rotary tilting table

Standard configuration

- Torque-drive rotary tilting table
- Fully enclosed splash guard

- Built-in spindle HSK A63 20,000 rpm
- 32-pocket tool changer
- Chain-type chip conveyor
- Air-cond. control cabinet
- High-precision spindle water cooler
- Glass scales on X/Y/Z axes

5X

U630-5X

Compact, powerful, 5-axis

Features

- Gantry design
- Direct-drive rotary tilting table

- Dual drive system with two ball screws on the Y axis to ensure the best dynamics

- Compact design with a minimal footprint



Standard configuration

- Torque-drive rotary tilting table
- Fully enclosed splash guard

- Built-in spindle HSK A63 16,000 rpm
- 60-pocket tool changer
- Chain-type chip conveyor
- Air-cond. control cabinet
- Oil cooling through ball screw
- Glass scales on X/Y/Z axes

The above specifications are subject to change without prior notice; no liability for errors. Machines may be shown with optional equipment.

For more information, visit **www.priminer.de**

5X

U800-5X

A powerhouse for 5-axis applications

approx. 20t machine weight

optional: HSK A100 spindle up to 360 Nm



„I am proud that, with the U800, we are presenting something genuinely new – solid, precise and made for the international market."

Sascha Schümann, Technical Sales Director



Standard configuration

- Torque-drive rotary tilting table
- A axis with dual direct drive
- Closed-loop system
- Built-in spindle HSK A63 16,000 rpm
  - 60-pocket tool changer
- Chain-type chip conveyor
- Air-cond. control cabinet
- High-precision spindle water cooler
- Glass scales on X/Y/Z axes

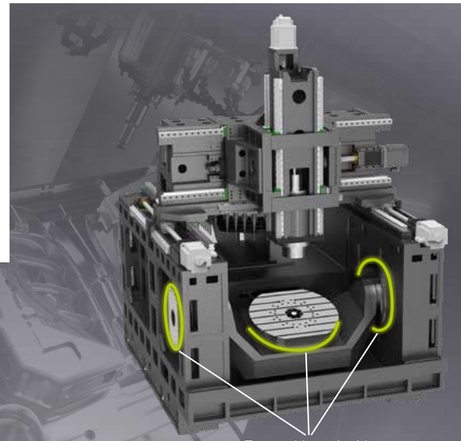

Torque Motor inside

Features

- Gantry design
- with torque technology in both axes
- Dual drive system with two ball screws on the Y axis to ensure the best dynamics
- Compact design with a minimal footprint
- Pneumatic brakes from Germany

Isolated axis movement – unaffected by workpiece handling

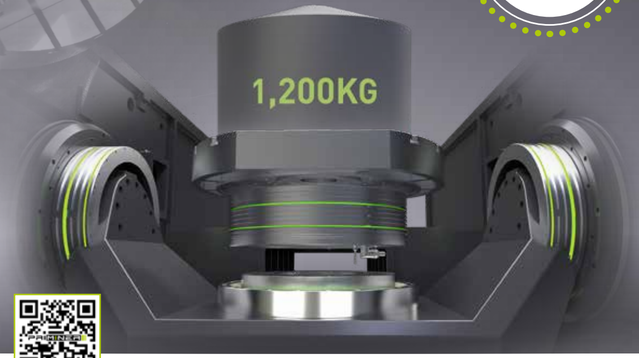

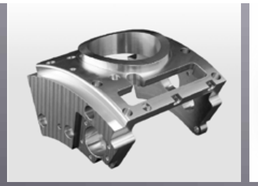



High-precision applications

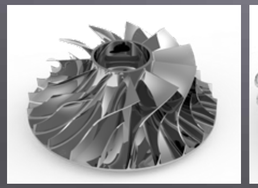



Aircraft & new energy applications



The above specifications are subject to change without prior notice; no liability for errors. Machines may be shown with optional equipment.

For more information, visit **www.priminer.de**

5X

U630T-5X

Milling and turning, perfectly combined.

Standard configuration

- Direct-drive rotary table
- Built-in spindle HSK T63, 15,000 rpm, 30/36 kW, 100/120 Nm (Siemens & Heidenhain)
- 60-pocket chain-type tool changer, HSK T63
- Sealed linear scales on the X/Y/Z axes
  - Rotary encoders on A/C axes
- Chain-type chip conveyor
- High-precision spindle water cooler
- Air-cond. control cabinet

Mill & Turn Technology in a single machine.



5X

U800T-5X

One machine. Twice the possibilities.

Standard configuration

- Direct-drive rotary table
- Built-in spindle HSK T63, 800 rpm, 30/36 kW, 100/120 Nm (Siemens & Heidenhain)
- 60-pocket chain-type tool changer, HSK T63
- Sealed linear scales on the X/Y/Z axes
- Rotary encoders on A/C axes
- Chain-type chip conveyor
- High-precision spindle water cooler
- Air-cond. control cabinet

5-axis milling + turning



The above specifications are subject to change without prior notice; no liability for errors. Machines may be shown with optional equipment.

5X

GT18-5X

XL 5-axis technology for the highest demands



Standard configuration

- Direct-drive B/C head
- Built-in spindle HSK A63 24,000 rpm
- Chip conveyors (two screw-type and one chain-type)
- Air-cond. control cabinet
- High-precision spindle water cooler
  - Glass scales on X/Y/Z axes
- Rotary encoder on B/C axes
- 60-pocket tool changer

Optimised double-column construction







Features

- High-speed and high-precision machining, widely used in tool and mould making, defence and aerospace engineering
- Dual drive on the X axis in master-slave configuration to ensure the best dynamic performance
- B/C head with torque motor supported on both sides
- Heidenhain glass scales on the X, Y and Z axes

For more information, visit **www.priminer.de**

The above specifications are subject to change without prior notice; no liability for errors. Machines may be shown with optional equipment.

5X

GT320-5X · GT420-5X

When machining goes XXL



Standard configuration

- Direct-drive B/C head
- Fully enclosed splash guard
- Chip conveyors (two screw-type and one chain-type)
- Air-cond. control cabinet
- High-precision spindle water cooler
- Glass scales on X/Y/Z axes
- Rotary encoder on B/C axes
- 60-pocket tool changer

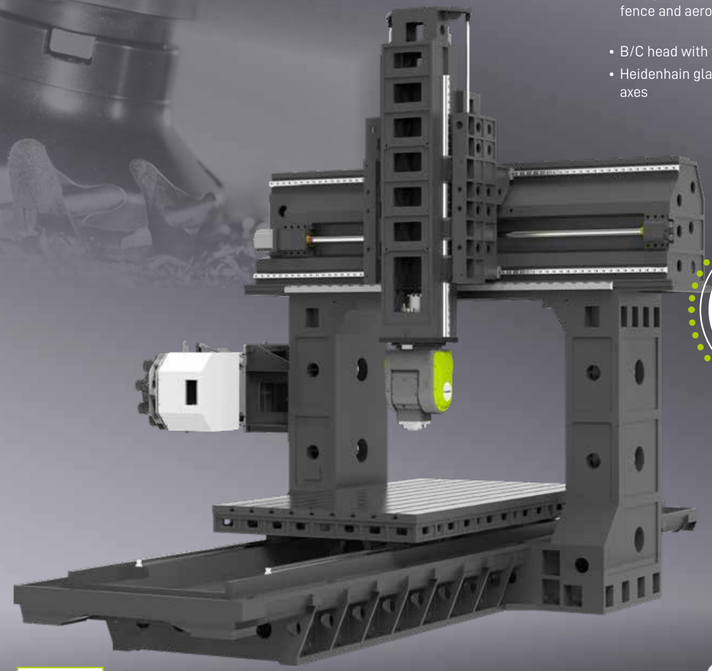

Optimised double-column construction

Features

- High-speed and high-precision machining, widely used in tool and mould making, defence and aerospace engineering
- B/C head with torque motor direct drive
- Heidenhain glass scales on the X, Y and Z axes



"The GT320-5X and GT420-5X are made for tool and mould making, aerospace or general mechanical engineering – wherever large, heavy and precise are called for."

Andreas Hendrich, Sales



For more information, visit **www.priminer.de**

The above specifications are subject to change without prior notice; no liability for errors. Machines may be shown with optional equipment.

5X

GT428-5X · GT428-5XG

Maximum rigidity and power in 5 axes

Range of milling heads available



Standard configuration

- 3 guides in the X axis
- 60-pocket chain-type tool changer
- Chip conveyors (two screw-type and one chain-type)
- Air-cond. control cabinet
- High-precision spindle water cooler
- Glass scales on X/Y/Z axes
- Rotary encoder on B/C axes

max. 960 Nm spindle torque (S6)

Features

- Heidenhain linear scales on the X, Y and Z axes
- 4 linear guides in the Z axis ensure high rigidity and high accuracy
- Z axis with dual drive technology, two ball screws for highly dynamic machining

- 3 linear guides on the Y axis
- Extra-wide machine column and base ensure high rigidity for heavy-duty machining

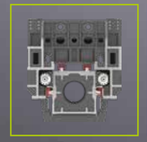

Z axis
4 linear guides



Y axis
3 linear guides

GT428-5X

5-axis simultaneous milling head, torque motor direct drives

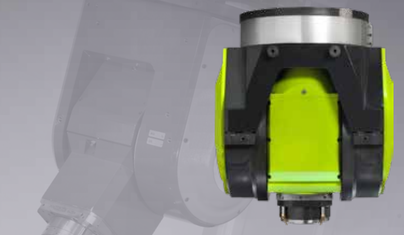

GT428-5XG

Optional universal head with torque motor direct drive

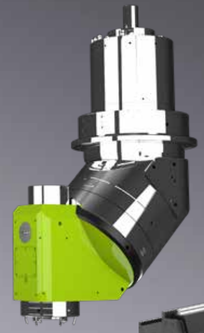

Up to 15,000 kg workpiece weight

1500 mm

For more information, visit **www.priminer.de**

The above specifications are subject to change without prior notice; no liability for errors. Machines may be shown with optional equipment.

5X

PT-Flex Series

High-speed gantry for maximum dynamics

X/Y axes linear motor direct drive



Standard configuration

- Model S AC head, built-in spindle HSK A63 24,000 rpm, 30/35 kW_72/85 Nm (SIEMENS/HEIDENHAIN)
- 32-pocket chain-type tool changer, HSK A63
- Chip conveyors (two screw-type and one chain-type)
- Air-cond. control cabinet
- High-precision spindle water cooler
- Glass scales on X/Y/Z axes
- Rotary encoder on B/C axes

For large and very large workpieces

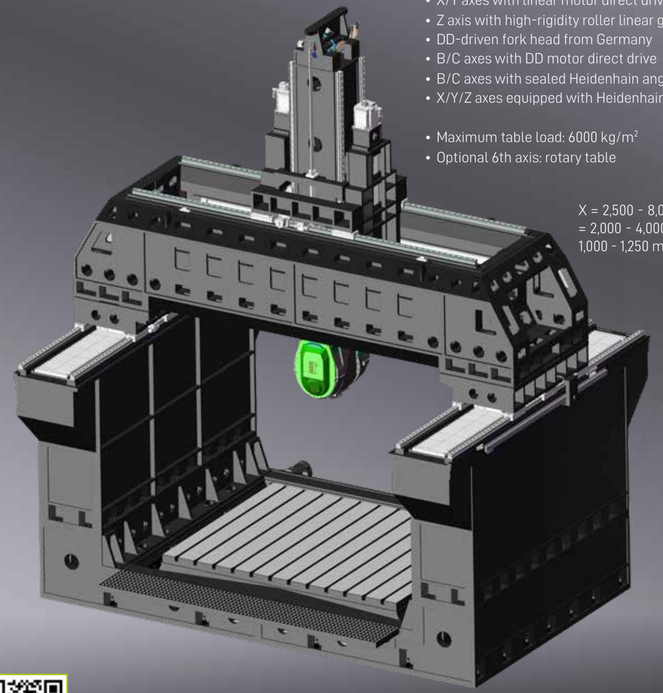

Features

- Box-in-box structure with symmetrical cross beam
- X/Y axes with linear motor direct drive (60 m/min)
- Z axis with high-rigidity roller linear guide
- DD-driven fork head from Germany
- B/C axes with DD motor direct drive
- B/C axes with sealed Heidenhain angle encoders
- X/Y/Z axes equipped with Heidenhain glass scales incl. sealing air

- Maximum table load: 6000 kg/m²
- Optional 6th axis: rotary table

X = 2,500 - 8,000 mm Y = 2,000 - 4,000 mm Z = 1,000 - 1,250 mm

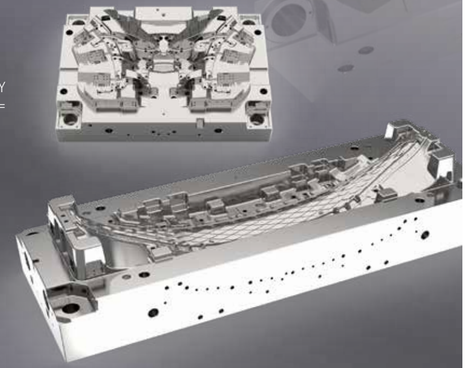

Customers of our PT-Flex series value the modular design and the wide range of options for adapting it to individual machining processes.

Matthias Mehrens,
Service engineer



For more information, visit **www.priminer.de**

The above specifications are subject to change without prior notice; no liability for errors. Machines may be shown with optional equipment.

11X

STELLARIS P18X

2-head/5-axis CNC
milling centre.
Twice the power.

Features

- 11-axis machining with two spindles
- HSK A63 spindles with 20,000 rpm
- Linear motors on all axes with 110 m/min feed rate, maximum acceleration 1G







Simultaneous machining on 2 channels for max. productivity



Machining example: structural component for electric vehicles, gigacasting

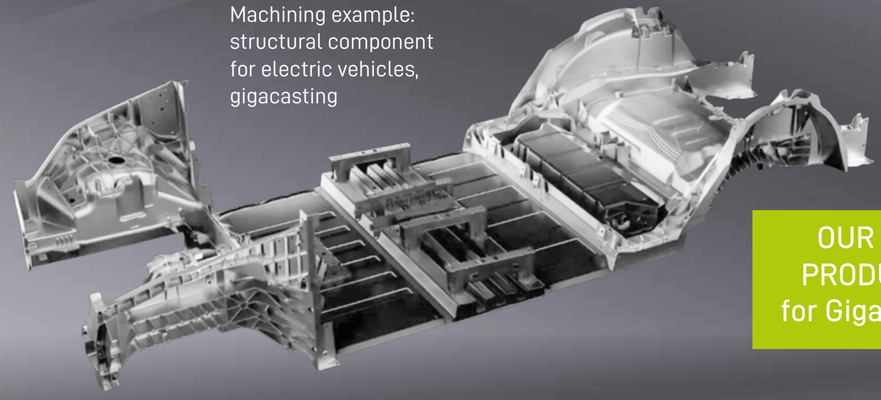

OUR MOST PRODUCTIVE for Gigacasting

For more information, visit **www.priminer.de**

AUTOMATION – Efficiency rethought

Modern production requires maximum productivity, flexibility and process reliability. PRIMINER machining centres offer the ideal basis for automated operation – whether in one-off or series production. By integrating intelligent automation solutions, the performance of the machines is fully exploited.

Individually adaptable – for every production environment PRIMINER machines can be combined with various automation systems – including:

- Pallet changers for fast workpiece changes
- Robot solutions for automated loading and unloading
- Flexible manufacturing cells for unmanned shifts
- Interfaces for connection to higher-level systems (e.g. ERP/MES)

These options allow precise adaptation to the respective production processes and increase efficiency in the long term.

The advantages at a glance

Higher machine utilisation:
Production around the clock – even in unmanned operation

Reduced non-productive time: Quick change of workpieces or clamping devices

Stable process quality: Repeatable processes with minimal tolerances

Cost reduction:
Lower unit costs through automated series production

Competitive advantage:
Quick response to market demands through scalable manufacturing

"Automation is no longer a topic for the future – it has long been a key growth driver in manufacturing. With PRIMINER machines, we offer our customers a stable, high-precision basis that can be automated flexibly. The result is not just efficiency but genuine competitiveness."

Oliver Delfs, Authorised signatory



5X with automation by ZERO CLAMP® Automation

- Machine
  - ▶ Automation
    - Zero-pt. clamp
    - Vice

ALL FROM ONE SOURCE



Example:
C500-5X with Zerobot

High-precision 5-axis machining combined with fully automated workpiece handling for maximum productivity and shorter set-up times.

3X and 5X with automation



Example:
V11L and C500-5X with Priminer Automation

High-performance vertical machining centres from PRIMINER, combined with automated workpiece loading for high part variety and efficient series production.

CONTROL TECHNOLOGY – Intelligence in every movement

SIEMENS



HEIDENHAIN



The control is the heart of every machine tool – it determines precision, process reliability and productivity. That is why PRIMINER relies exclusively on proven CNC control systems from the world's leading manufacturers for all its machining centres. Depending on the model, our machines are available with controls from Siemens, Heidenhain or Fanuc – flexibly configurable and precisely tailored to the respective application and production environment.

PRIMINER combines reliable mechanics with intelligent control – for maximum control in every dimension.

FANUC





Whether Siemens, Heidenhain or Fanuc – our machines run reliably because we know exactly what matters.

Matthias Mehrens and Flemming Hahn, Service engineers

3X



GT-SERIES



UHP-SERIES



SHOP MATE V5

DELTA CENTER SERIES

3AXES.
CLASSIC.
PRECISE.
INDISPENSABLE.

When it comes to economical precision in day-to-day production, 3-axis technology remains indispensable. Whether one-off or series, prototype or standard component – 3-axis machining centres form the backbone of modern workshops. They stand for high availability, simple operation and excellent value for money.

PRIMINER offers a versatile portfolio of 3-axis centres – from compact machines for training workshops or small batches through to large-format solutions for heavy-duty machining. All models impress with stable machine structures, powerful spindles and high-quality components.

Thanks to modern control technology and optional extensions like 4th axis, through-spindle coolant or automation, our 3-axis machines can be flexibly adapted to individual requirements.

For many of our customers, 3-axis machining is the starting point – and often the most important part of day-to-day production.

PRIMINER 3-axis centres – robust, precise and economical – developed for everyday use.



ALPHA CENTER SERIES



POWER CENTER SERIES

PORTAL-CENTER



PORTAL CENTER SERIES

3X

3-Axis Machines Overview



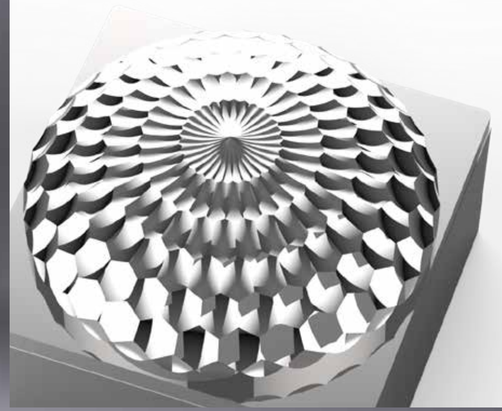



For more information, visit **www.priminer.de**

3X



GT7



GT11



GT16



GT18

Specifications	GT7		GT11	GT16		GT18
X/Y/Z travel	700 / 600 / 450 mm		1,150 / 700 / 520 mm	1,600 / 1,200 / 600 mm		1,800 / 1,400 / 800 mm
Table size	800 x 600 mm		1,200 x 700 mm	1,800 x 1,050 mm		1,800 x 1,400 mm
Max. table load	600 kg		1,500 kg	3,000 kg		6,000 kg
Spindle taper	HSK A63	HSK E32	HSK A63	HSK A100	HSK A63	HSK A63
Spindle speed	20,000 rpm	40,000 rpm	20,000 rpm	10,000 rpm	20,000 rpm	20,000 rpm
Spindle motor power	20 /24 kW	6.3 / 9.45 kW	30 / 36 kW	54 / 65 kW	30 / 36 kW	30 / 36 kW
Spindle motor torque	48 / 58 Nm	2 / 3 Nm	72 / 86 Nm	300 / 360 Nm	72 / 86 Nm	100 / 120 Nm
CNC control	Siemens / Heidenhain					

The above specifications are subject to change without prior notice; no liability for errors. Machines may be shown with optional equipment.

3X



UHP900



UHP1100



UHP1300

Specifications	UHP900		UHP1100		UHP1300	
X/Y/Z travel	900 / 600 / 600 mm		1,100 / 650 / 600 mm		1,300 / 650 / 600 mm	
Table size	1,060 x 600 mm		1,300 x 600 mm		1,500 x 650 mm	
Max. table load	800 kg		1,000 kg		1,200 kg	
Spindle taper	BBT40/SK40/CAT40	BBT40/SK40/CAT40	BBT40/SK40/CAT40	BBT40/SK40/CAT40	BBT40/SK40/CAT40	BBT40/SK40/CAT40
Spindle speed	12,000 rpm	12,000 rpm	12,000 rpm	15,000 rpm	12,000 rpm	15,000 rpm
Spindle motor power	11 / 18.5 kW	9 / 22 kW	15 / 30 kW	20 / 53 kW	15 / 30 kW	20 / 53 kW
Spindle motor torque	52.5 / 118 Nm	63 / 135 Nm	95.5 / 191 Nm	126 / 250 Nm	95.5 / 191 Nm	126 / 250 Nm
CNC control	Fanuc	Siemens Heidenhain	Fanuc	Siemens Heidenhain	Fanuc	Siemens Heidenhain

The above specifications are subject to change without prior notice; no liability for errors. Machines may be shown with optional equipment.

3X



V7L



V11L



V13L



V15L



V18

Specifications	V7L		V11L		V13L		V15L		V18	
X/Y/Z travel	760 / 450 / 520 mm		1,100 / 600 / 600 mm		1,300 / 650 / 600 mm		1,500 / 760 / 700 mm		1,800 / 900 / 800 mm	
Table size	900 x 420 mm		1,200 x 600 mm		1,500 x 650 mm		1,700 x 700 mm		2,000 x 900 mm	
Max. table load	500 kg		1,000 kg		1,200 kg		1,500 kg		1,600 kg	
Spindle taper	SK40 / BT40 / CAT40		SK40 / BT40 / CAT40		SK40 / BT40 / CAT40		SK40 / BT40 / CAT40		BT50 / SK50	
Spindle speed	10,000 rpm		10,000 rpm		10,000 rpm		10,000 rpm		6,000 rpm	
Spindle motor power	7.5 / 15 kW	9 / 22 kW	11 / 18.5 kW	9 / 22 kW	11 / 18.5 kW	20 / 53 kW	11 / 18.5 kW	20 / 53 kW	15 / 20.3 kW	17 / 42 kW
Spindle motor torque	35.8 / 95.5 Nm	63 / 135 Nm	52.5 / 118 Nm	63 / 135 Nm	52.5 / 118 Nm	126 / 250 Nm	52.5 / 118 Nm	126 / 250 Nm	143 / 259 Nm	183 / 400 Nm
CNC control	Fanuc	Siemens	Fanuc	Siemens Heidenhain	Fanuc	Siemens Heidenhain	Fanuc	Siemens Heidenhain	Fanuc	Siemens

The above specifications are subject to change without prior notice; no liability for errors. Machines may be shown with optional equipment.

3X



ShopMate V5



T7



V7L Lite



V10L

Specifications	ShopMate V5		T7		V7L Lite		V10L	
X/Y/Z travel	500 / 300 / 400 mm		700 / 450 / 300 mm		760 / 450 / 520 mm		1,020 / 530 / 560 mm	
Table size	650 x 300 mm		800 x 420 mm		900 x 420 mm		1,100 x 500 mm	
Max. table load	200 kg		250 kg		500 kg		600 kg	
Spindle taper	BT40 / SK40 / CAT40		BBT30		SK40 / BT40 / CAT40		SK40 / BT40 / CAT40	
Spindle speed	10,000 rpm		12,000 rpm		10,000 rpm		10,000 rpm	
Spindle motor power	3.7 / 13 kW	4.8 / 21 kW	3.7 / 13 kW	4.8 / 21 kW	3.7 / 13 kW	7.5 / 15 kW	7.5 / 15 kW	7.5 / 15 kW
Spindle motor torque	23.6 / 82.8 Nm	21 / 45 Nm	23.6 / 82.8 Nm	21 / 45 Nm	23.6 / 82.8 Nm	36 / 72 Nm	35.8 / 95.5 Nm	36 / 72 Nm
CNC control	Fanuc	Siemens	Fanuc	Siemens	Fanuc	Siemens	Fanuc	Siemens

The above specifications are subject to change without prior notice; no liability for errors. Machines may be shown with optional equipment.

3X



V1613HS



V2516



V3320 | V4020



V4028

Specifications	V1613HS	V2516		V3320		V4020		V4028	
X/Y/Z travel	1,600 / 1,300 / 600 mm	2,500 / 1,600 / 800 mm		3,300 / 2,700 / 1,000 mm		4,200 / 2,700 / 1,000 mm		4,200 / 3,300 / 1,200 mm	
Table size	1,700 x 1,200 mm	2,500 x 1,400 mm		3,300 x 1,700 mm		4,000 x 1,900 mm		4,000 x 2,400 mm	
Max. table load	3,000 kg	7,000 kg		10,000 kg		12,000 kg		15,000 kg	
Spindle taper	HSK A63	BT50 / SK50		BT50 / SK50		BT50 / SK50		BT50 / SK50	
Spindle speed	18,000 rpm	6,000 rpm		6,000 rpm		6,000 rpm		6,000 rpm	
Spindle motor power	30 / 36 kW	15 / 20.3 kW	17 / 42 kW	22 / 45 kW	22 / 60 kW	22 / 45 kW	22 / 60 kW	22 / 45 kW	22 / 60 kW
Spindle motor torque	85 / 102 Nm	143 / 259 Nm	183 / 400 Nm	140 / 286 Nm	172 / 380 Nm	140 / 286 Nm	172 / 380 Nm	140 / 286 Nm	172 / 380 Nm
CNC control	Siemens / Heidenhain	Fanuc	Siemens Heidenhain	Fanuc	Siemens Heidenhain	Fanuc	Siemens Heidenhain	Fanuc	Siemens Heidenhain

The above specifications are subject to change without prior notice; no liability for errors. Machines may be shown with optional equipment.

3X

GT7

Precision in the smallest of spaces

Features

- The best choice for high-speed milling
- Gantry construction in monobloc design
- Dual drive system with two ball screws on the Y axis to ensure the best dynamics

- Compact design with a small footprint
- Optionally prepared for graphite machining

Standard configuration

- Built-in motor spindle HSK A63 20,000 rpm
- 32-pocket tool changer
- Chain-type chip conveyor
- Air-cond. control cabinet
- High-precision spindle water cooler
  - Glass scales on X/Y/Z axes



3X

GT11

Portal power for 3-axis machining

Features

- High-speed and high-precision machining, widely used in tool and mould making, electronics, defence, aerospace and medical technology

- Gantry design "GT" ensures high rigidity
- Extra-wide door for easy loading and unloading

Standard configuration

- Built-in spindle HSK A63 20,000 rpm
- 40-pocket chain-type tool changer

- Two screw-type and one chain-type chip conveyor
- Air-cond. control cabinet
  - Precision spindle oil cooler
- Heidenhain linear scales on X/Y/Z axes

"Our GT 3-axis machines are made for real-world use – when large workpieces demand the highest precision and maximum stability."



Matthias Stappenbeck, Sales



The above specifications are subject to change without prior notice; no liability for errors. Machines may be shown with optional equipment.

3X

GT16

Robust and precise, built for big jobs

Features

- High-speed and high-precision machining
- Extra-wide machine column and base ensure high rigidity

- Extra-wide door for easy loading and unloading
- optional oil cooling
- Heidenhain glass scales in three axes

High accuracy



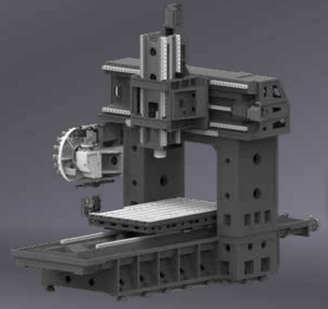

Standard configuration

- Built-in spindle HSK A63 20,000 rpm
- 40-pocket servo tool changer with chain
- Two screw-type and one chain-type chip conveyor
- Air-cond. control cabinet
- High-precision spindle water cooler
- Linear scales for X/Y/Z

3X

GT18

Gantry power for precision

For tool and mould making, electronics, defence, aerospace and medical technology

Features

- High-speed and high-precision machining
- Gantry design
- Dual drive system with two ball screws and three linear guides on the Y axis to ensure high machining accuracy

- Extra-wide door for easy loading and unloading
- Oil cooling through ball screw
- Heidenhain glass scales in three axes
- Servo tool changer with 60 pockets, chain-type

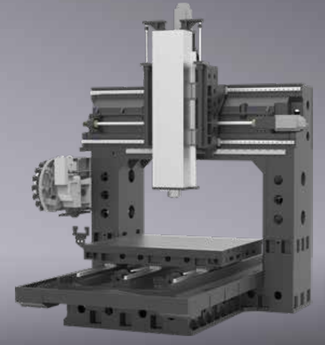



Standard configuration

- Built-in spindle HSK A63 20,000 rpm
- 60-pocket servo tool changer with chain
- Two screw-type and one chain-type chip conveyor
- Air-cond. control cabinet
- High-precision spindle water cooler
- Linear scales for X/Y/Z
- Oil-air spindle lubrication system

For more information, visit **www.priminer.de**

The above specifications are subject to change without prior notice; no liability for errors. Machines may be shown with optional equipment.

3X

UHP900

Ultra High Performance for powerful and precise machining

Features

- The UHP series was developed specifically for high-speed and high-performance machining applications
- Advanced design with body structure reinforced through FEM analysis.
- Extra-wide machine column and base ensure high rigidity during high-speed movements

- Glass scales (optional)





Standard configuration

- Direct-drive spindle BT40/SK40/CAT40 12,000 rpm, 9/22kW, 63/135Nm (Siemens & Heidenhain)
- Direct-drive spindle BBT40/SK40/CAT40 12,000 rpm, 11/18.5kW, 52.5/118Nm (FANUC)
- 24-pocket arm-type tool changer, BT40/SK40/CAT40
- Roller linear guides on all axes

- Chain-type chip conveyor
- Oil cooler for the spindle
- Air-cond. control cabinet

"The UHP series is not only reliable in everyday use – it can also be flexibly expanded, e.g. with a 4th axis or through-spindle coolant. Ideal for growing demands."

Flemming Hahn, Service engineer



3X

UHP1100 · 1300

Ultra High Performance





Standard configuration

- Direct-drive spindle BBT40/SK40/CAT40 15,000 rpm, 20/53kW,126/250Nm (Siemens and Heidenhain)

- Direct-drive spindle BBT40/SK40/CAT40 12,000 rpm 15/30kW, 95.5/191Nm (FANUC)
- 24-pocket arm-type tool changer, BT40/SK40/CAT40

- Roller linear guides on all axes
- Two screw-type and one chain-type chip conveyor
- Oil cooler for the spindle
- Air-cond. control cabinet

For more information, visit **www.priminer.de**

3X V7L

Compact precision for everyday use

C3 ball screws and high-quality guides for maximum accuracy





Standard configuration

- Fully enclosed splash guard
- Belt-drive spindle 10,000 rpm
- 24-pocket double-arm tool changer
- Chain-type chip conveyor
- Spindle oil cooler
- Air-cond. control cabinet
- Tapping without a compensating chuck
- Ethernet, CF card and USB interface

Features

- Entry-level class, available with various controls
- Economical parts production
- Space-saving machine concept



3X V11L

The perfect balance of stability and dynamics

Features

- Available with Siemens, Fanuc or Heidenhain
- Various spindle options available
- Stable, heavily ribbed cast-iron frame
- HIWIN ball screws and roller linear guides



Standard configuration

- Fully enclosed splash guard
- Belt-drive spindle 10,000 rpm
- 24-pocket double-arm tool changer
- Chain-type chip conveyor
- Spindle oil cooler
- Control cabinet air conditioning
- Tapping without a compensating chuck
- Ethernet, CF card and USB interface

BESTSELLER

The above specifications are subject to change without prior notice; no liability for errors. Machines may be shown with optional equipment.

For more information, visit **www.priminer.de**

3X

V13L

Linear guides for maximum precision

Features

- Stable, heavily ribbed cast-iron frame
- HIWIN roller linear guides
- Dynamic axis movements thanks to state-of-the-art drives

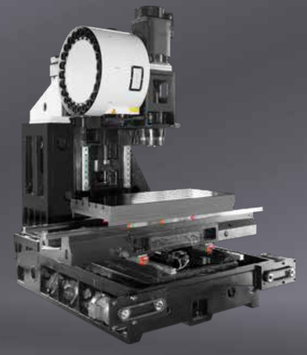



Standard configuration

- Fully enclosed splash guard
- Belt-drive spindle 10,000 rpm
- 24-pocket double-arm tool changer
- Chain-type chip conveyor
- Spindle oil cooler
- Air-cond. control cabinet
- Tapping without a compensating chuck
- Ethernet, CF card and USB interface
- 2 guides in the Y axis

Precise allrounder

3X

V15L

High performance in series production, precision in every detail

Features

- 4 linear guideways for maximum rigidity and high load capacity in the Y axis
- High-precision ball screws ensure backlash-free axis movements with high accuracy across all travels
- Spindle speed up to max. 10,000 rpm (6000/12,000/15,000 optional) with ISO 40 (BT 50 optional) tool holders
- max. 53 kW main spindle

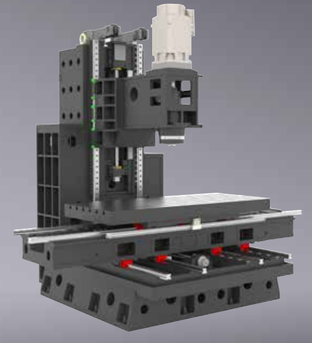



Standard configuration

- Fully enclosed splash guard
- Belt-drive spindle 10,000 rpm
- 24-pocket double-arm tool changer
- Chain-type chip conveyor
- Spindle oil cooler
- Air-cond. control cabinet
- Rigid tapping
- Ethernet, CF card and USB interface

Spindle options for every application – from 40 and 50 taper through to HSK A63 and 100

For more information, visit **www.priminer.de**

The above specifications are subject to change without prior notice; no liability for errors. Machines may be shown with optional equipment.

3X

V18

The best choice for heavy machining



Standard configuration

- Fully enclosed splash guard
- Belt-drive spindle 6,000 rpm
- 24-pocket double-arm tool changer
- Two screw-type and one chain-type chip conveyor
- Oil cooler for the spindle
- Air-cond. control cabinet
- Tapping without a compensating chuck
- Ethernet, CF card and USB interface

"The V18 runs stably and precisely even with heavy workpieces – perfect for high metal removal volumes and demanding materials."

Ivan Tomic, Service engineer





Optional with gearbox

Features

- The best choice for extra-heavy-duty machining: machining large components and geometries
- X and Y axes with roller flat guides
- 50-taper spindle with 6,000 rpm belt drive (optionally with gearbox)

The above specifications are subject to change without prior notice; no liability for errors. Machines may be shown with optional equipment.

3X

ShopMate V5

Basic CNC technology for training and practice

Ideal for:

- Workshops, start-ups
- One-off and small-batch production
- Research and development

Ideal for training





Standard configuration

- Belt-drive spindle 10,000 rpm
- 12-position carousel tool changer
- Spindle oil cooler
- Control cabinet heat exchanger
- Rigid tapping
- Ethernet, CF card and USB interface

3X

T7

Proven technology, rethought

Features

- Highly rigid machine frame for high acceleration
- High-speed, low-noise ball screw and linear guides in three axes
- Rapid traverse 48 m/min to cut non-productive time





Standard configuration

- Fully enclosed splash guard
- Direct-drive spindle 12,000 rpm
- Servo tool changer with 26 pockets
- Oil cooler for the spindle
- Control cabinet heat exchanger
- Tapping without a compensating chuck
- Ethernet, CF card and USB interface

I enjoy working on the T7 – the machine is reliable, easy to access and simply runs smoothly day to day.

Matthias Mehrens,
Service engineer



For more information, visit **www.priminer.de**

The above specifications are subject to change without prior notice; no liability for errors. Machines may be shown with optional equipment.

3X

V7L Lite

Powerful and affordable for every workshop

Features

- Stable grey cast-iron frame minimises vibration
- Class C3 ball screws ensure the highest accuracy and durability

- Compact size
- Versatile thanks to optional configuration





Standard configuration

- Fully enclosed splash guard

- Belt-drive spindle 10,000 rpm
- 24-pocket double-arm tool changer
- Screw-type chip conveyor
- Spindle oil cooler
- Control cabinet heat exchanger
- Tapping without a compensating chuck
- Ethernet, CF card and USB interface

For tool and model making, research and development

3X

V10L

A lot of machine for little space and budget





Standard configuration

- Fully enclosed splash guard

- Belt-drive spindle 10,000 rpm
- 24-pocket double-arm tool changer
- Chain-type chip conveyor
- Spindle oil cooler
- Air-cond. control cabinet
- Tapping without a compensating chuck
- Ethernet, CF card and USB interface

For more information, visit **www.priminer.de**

The above specifications are subject to change without prior notice; no liability for errors. Machines may be shown with optional equipment.

3X

V1613HS

High-speed performance for XL components – efficient and economical



Standard configuration

- Fully enclosed splash guard
- Direct-drive spindle 18,000 rpm
- Air-cond. control cabinet
- Tapping without a compensating chuck
- Two screw-type and one chain-type chip conveyor
- Ethernet, CF card and USB interface

Features

- Stable twin-column structure for machining large and heavy workpieces
- Design provides high rigidity, especially important for precise milling work
- Compact machining centre with long travels

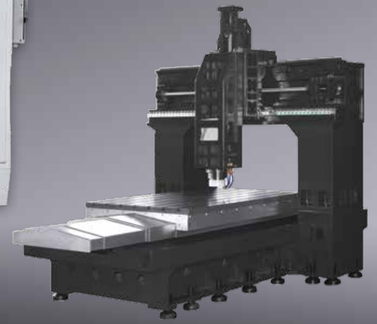

3X

V2516

When XL parts need precision

TOP value for money

Features

- Extra-wide column, low-vibration structure
- Alternatively 12,000 rpm, built-in spindle 298/346 Nm, HSK A100 or 18,000 rpm, built-in spindle 85/102 Nm, HSK A63



Standard configuration

- Fully enclosed splash guard
- Belt-drive spindle 6,000 rpm
- Chip conveyors (two screw-type and one chain-type)
- Air-cond. control cabinet
- Tapping without a compensating chuck
- Spindle oil cooler
- Ethernet, CF card and USB interface



X 2500 mm / Y 1600 mm – ideal for large mould plates and structural parts

For more information, visit **www.priminer.de**

The above specifications are subject to change without prior notice; no liability for errors. Machines may be shown with optional equipment.

3X

V3320 · V4020

Maximum stability for XL workpieces

Features

- Robust construction for high precision, rigidity and vibration damping
- High flexibility thanks to different spindles for different applications
- Customisable down to the last detail
- Reliable, powerful and precise



Standard configuration

- Fully enclosed splash guard
- Belt-drive spindle 6,000 rpm
- Chip conveyors (two screw-type and one chain-type)
- Air-cond. control cabinet
- Tapping without a compensating chuck
- Spindle oil cooler
- Ethernet, CF card and USB interface
- Standard 1000 mm Z axis

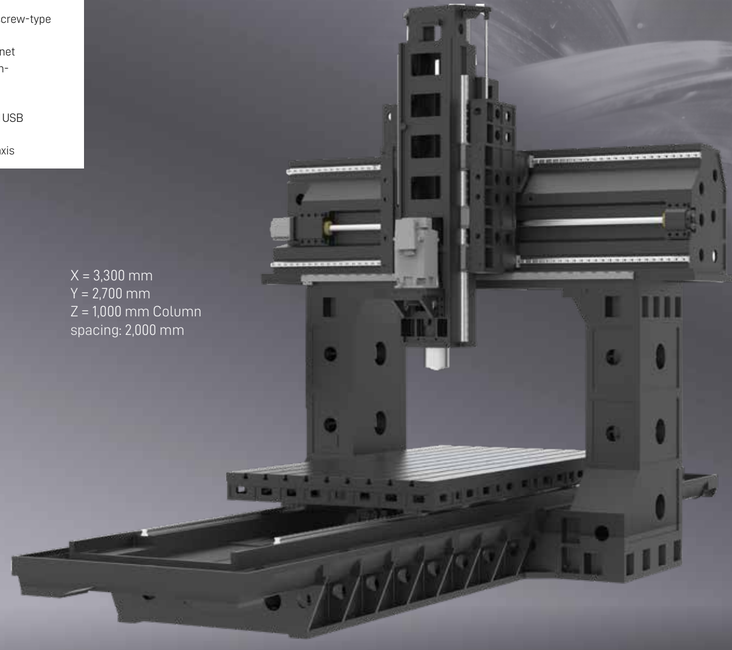

X = 3,300 mm
Y = 2,700 mm
Z = 1,000 mm Column spacing: 2,000 mm

Robust construction for high rigidity

For more information, visit **www.priminer.de**

The above specifications are subject to change without prior notice; no liability for errors. Machines may be shown with optional equipment.

3X

V4028

For precise machining of large-format parts

Features

- Extra-wide columns to minimise vibration
- Roller guides in all axes to absorb high cutting forces while maintaining dynamics
- Z axis with dual drive technology, two ball screws for highly dynamic machining
- 4 linear guides on the Z axis ensure high rigidity and high accuracy
- 3 linear guides on the X axis
- Ergonomic arrangement of the controls



Y axis
3 linear guides

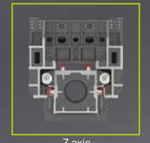

Z axis
4 linear guides

Standard configuration

- Fully enclosed splash guard
- Belt-drive spindle 6,000 rpm
- Chip conveyors (two screw-type and one chain-type)
- Air-cond. control cabinet
- Tapping without a compensating chuck
- Spindle oil cooler
- Ethernet, CF card and USB interface

X = 4,200 mm
Y = 3,300 mm
Z = 1,200 mm Column spacing: 2,800 mm

Travel
up to
4,200 mm

PRIMINER – developing towards the future.



Start of global expansion
Founded in Neumünster (Germany) as the base for high-quality manufacturing technology

European strategy realigned Opening of the subsidiary in Serbia and expansion of local services in Southern Europe



Smart Manufacturing Upgrade Enping (Guangdong) production site commissioned, annual capacity increased to 800 units





Strategic positioning in the Jiangzhe Delta Technical centres opened in Shanghai (2023) and Ningbo (2025) – building local sales and service expertise in East China

2011 · 2016 · 2017 · 2018 · 2020 · 2022 · 2023 · 2024 · 2025 · 2026



Market expansion in the Asia-Pacific region
Dongguan site founded and integrated into the global supply chain



Technology localisation
Local production of 5-axis machining centres in China



Breakthrough in research and development
Suzhou branch founded as regional operations centre for East China



Relocation of the German headquarters

Breakthrough in research and development In-house high-speed portal technology (dual portal and dual spindle) successfully deployed in the STELLARIS P18X production line at XPENG Motors



Opening of the Thailand and Malaysia subsidiaries





The above specifications are subject to change without prior notice; no liability for errors. Machines may be shown with optional equipment.



Ultrasonic-assisted grinding and drilling with VibroCut *ultrasonic*

More precision, less wear – for new process potential

When ultrasound is applied to a machining process, this generates high-frequency vibrations in the micrometre range (typically at 20 kHz to 100 kHz). These have several positive effects on the tool cutting edge and the entire machining process:

Ultrasonic assistance
The vibrations modify the process kinematics and tribological conditions in the cutting zone. This minimises friction and reduces process forces.

Improved material removal High-frequency vibrations enable more efficient material removal. The cutting edge of the drill penetrates the material intermittently, making the cutting process faster and more precise.

Lower cutting forces The ultrasonic vibrations reduce the cutting forces, which puts less stress on both the tool and the workpiece. This is particularly advantageous when machining hard or brittle materials as well as materials that are difficult to almost impossible to machine, such as Monel, titanium or nickel-based alloys. For softer materials such as copper and aluminium, feed rates can also be increased significantly.

Reduced friction & longer tool life
The lower friction between the tool cutting edge and the workpiece leads to reduced heat generation and less tool wear. Optimised chip evacuation also increases process reliability.

Higher precision & accuracy
The reduced forces improve drilling precision, e.g. in drilling and deep drilling, and reduce centreline deviation – a decisive advantage for demanding drilling applications.

Advantages of ultrasonic-assisted machining

Increased efficiency
Faster machining times and optimised processes

Higher precision Exact machining results with reduced deviation

Cost-effectiveness
Lower tool costs and longer tool life

Variety of materials
Ideal for hard, brittle or difficult-to-machine materials

PRIMINER
Ultrasonic series



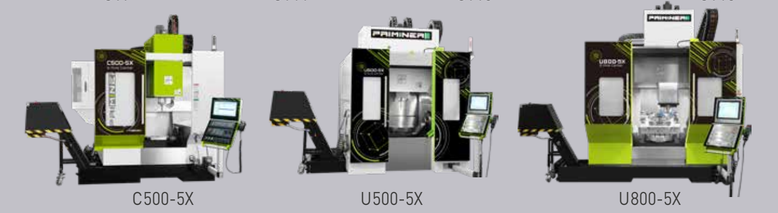

VIBROCUT



Economic benefits

Thanks to reduced tool costs, longer tool life and shorter machining times, VibroCut ultrasonic offers considerable savings potential – especially for precision and quality applications.

WHERE GERMAN QUALITY MEETS CHINESE DRIVE

Service that thinks ahead. Support that lasts.

From initial commissioning through to ongoing operation, our customer service supports you competently and reliably – on site or via remote maintenance. PRIMINER Service means short lines of communication, clear solutions and technical support when it matters. Via our central support number you reach trained contacts directly – fast, personal and practical.

Hand-scraped precision – for perfect guide surfaces

At PRIMINER, selected contact and guide surfaces are traditionally scraped by hand. This precise manual technique ensures optimum flatness, a perfect fit and even pressure distribution – essential for the highest accuracy and long-term machine stability. Every scraped surface is a visible mark of quality – and the result of decades of experience in machine tool building.

Built under controlled conditions

PRIMINER machines are assembled and tested almost exclusively in a temperature-stable environment. This minimises thermally induced deformation – for stable geometries, reliable measurements and lasting precision. The process is used specifically where it is decisive for overall accuracy – efficient and well thought out.

Global development – local thinking

The PRIMINER R&D team works across sites in Germany and China. While the focus in Germany is on application engineering, customer requirements and quality standards, the team in China ensures rapid implementation, prototyping and production readiness. This close exchange produces practical, precise and market-oriented machine solutions – globally aligned, locally optimised.



Trade fair
CCMT 2026 Shanghai


Trade fair
CIMT 2025 Beijing


Trade fair
EMO 2025 Germany


Open house 2025
PRIMINER Germany


Trade fair
DMC 2025 Shanghai

„Our partnership combines German engineering with Chinese manufacturing power – precise, efficient and on an equal footing. This combination is not a compromise but a genuine competitive advantage."

Benjamin Kaehlcke and Jack Chen CEO

Priminer Werkzeugmaschinen GmbH





www.priminer.de

PRIMINER Werkzeugmaschinen GmbH
Tungendorfer Str.10 · 24536 Neumünster / Germany
Tel: +49 (0) 4321-25 20 03 -0
E-Mail: info@priminer.de

PRIMINER SOUTH EAST EUROPE · PRIMINER d.o.o. BEOGRAD
Vladimira Popovica 38-40 · GTC - 11070 Beograd / Srbija
Tel: +381 69 702 705
Fax: +381 11 715 69 00
E-Mail: office@priminer.de

PRIMINER MACHINE TOOLS DONGGUAN CO., LTD
XinRuYi Industrial Park, Fuxing Road, Xingguang Village,
Huangjiang Town, Dongguan, P.R.China
Tel: +86 769 838 490 61
Fax: +86 769 838 490 62
E-Mail: info@priminer.com

PRIMINER USA
298 Willis Street
Gaffney, South Carolina 29341
Tel: +1 (267) 907-2876
E-Mail: sales@priminerusa.com
Web: priminerusa.com

Priminer Thailand Co Ltd
8 Chaloem Phrakiat Ratchakan Thi 9 Soi 30 Yaek 23,
Dok Mai, Prawet, Bangkok 10250 Thailand
E-Mail: info@priminer.com

Priminer (M) SDN BHD
21, Lorong Asasjaya 28, Kawasan Industri Ringan AsasJaya,
14000 Bukit Mertajam, Pulau Pinang, Malaysia
E-Mail: info@priminer.com

202611