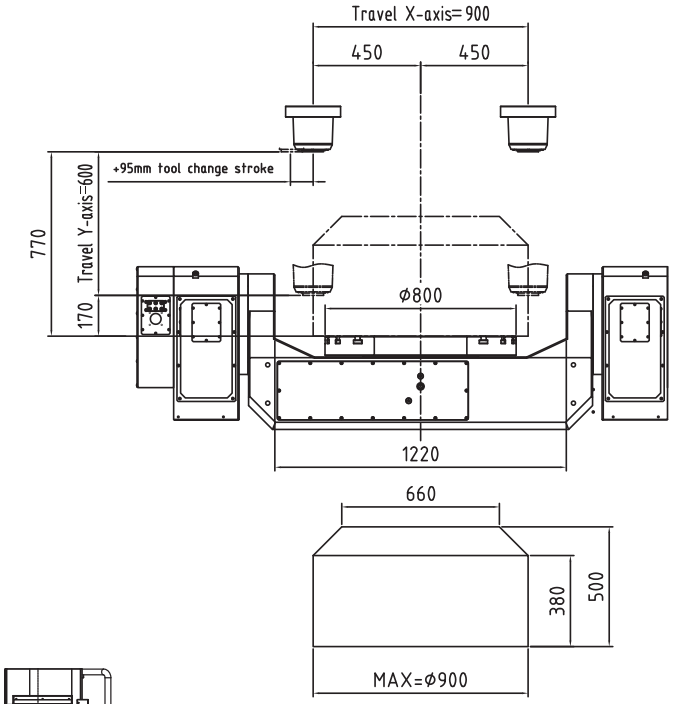
Travel X-axis=900
450
450
+95mm tool change stroke
770
Travel Y-axis=600
170
ø800
1220
660
380
500
MAX=ø900

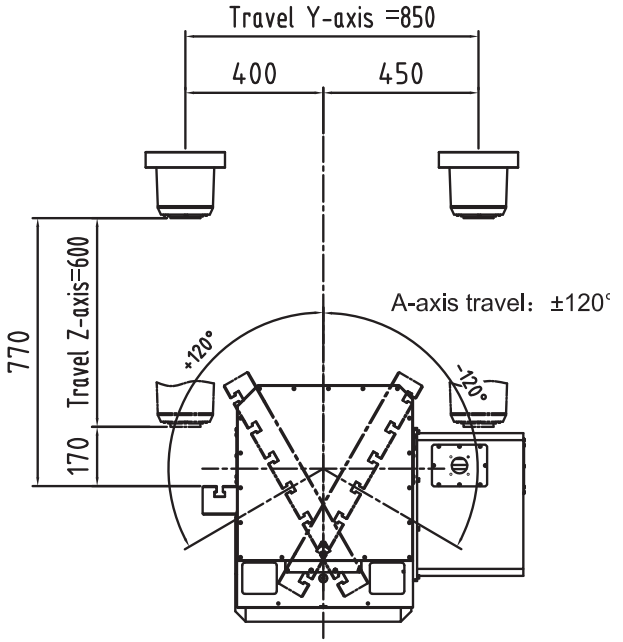
Travel Y-axis =850
400
450
A-axis travel: ±120°
770
Travel Z-axis=600
170
+120°
-120°

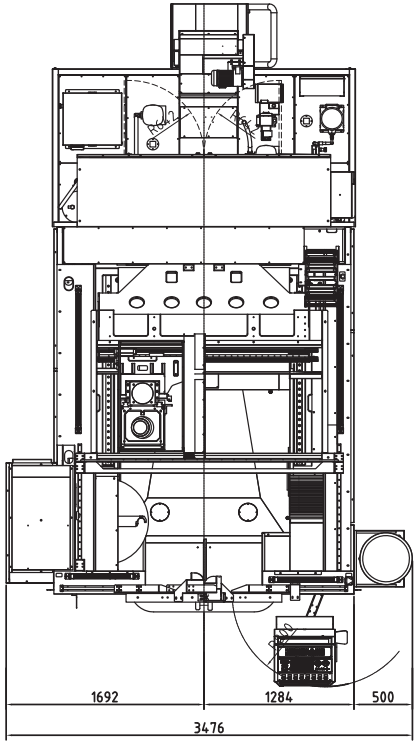
1692
1284
500
3476

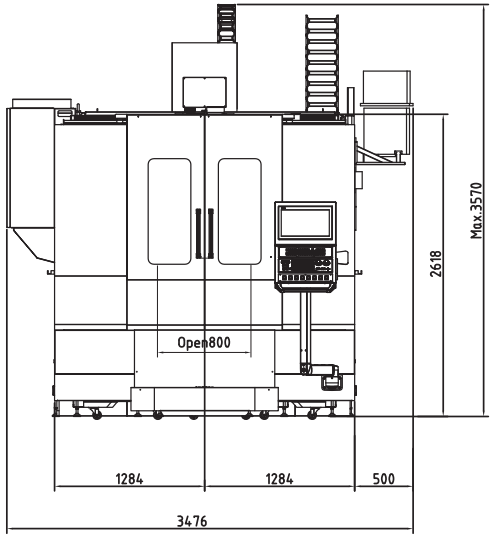
Max.3570
2618
Open800
1284
1284
500
3476

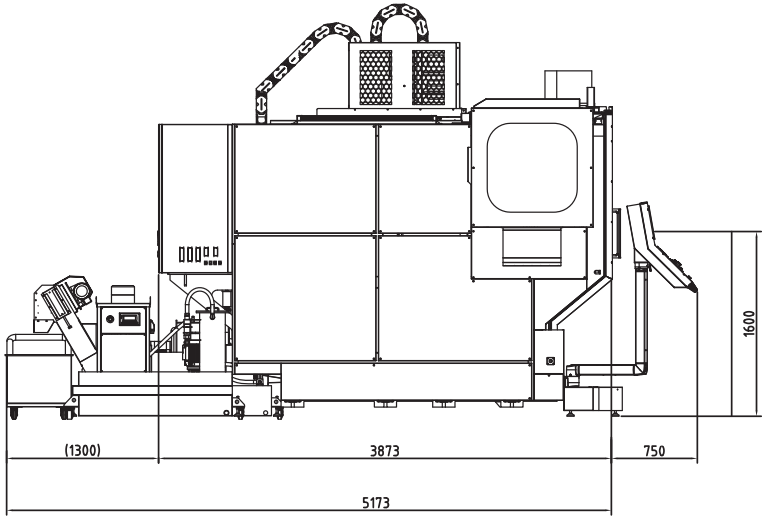
1600
(1300)
3873
750
5173