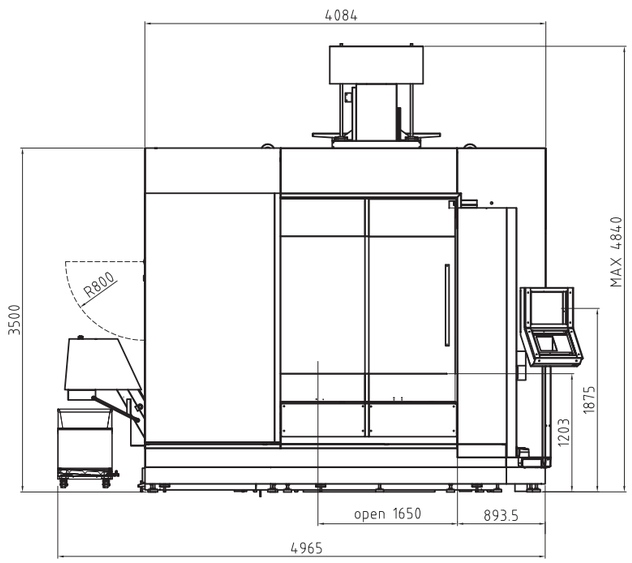
4084
R800
3500
MAX. 4840
1875
1203
open 1650
893.5
4965

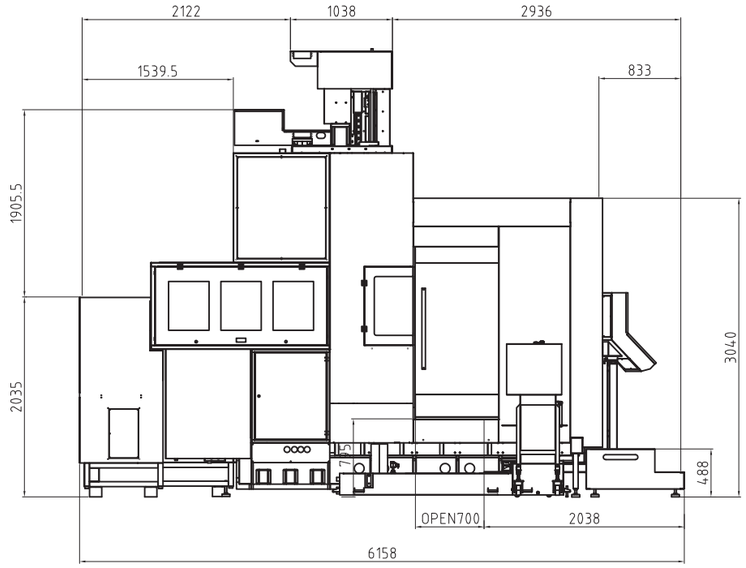
2122
1038
2936
1539.5
833
1905.5
2035
3040
488
OPEN700
2038
6158

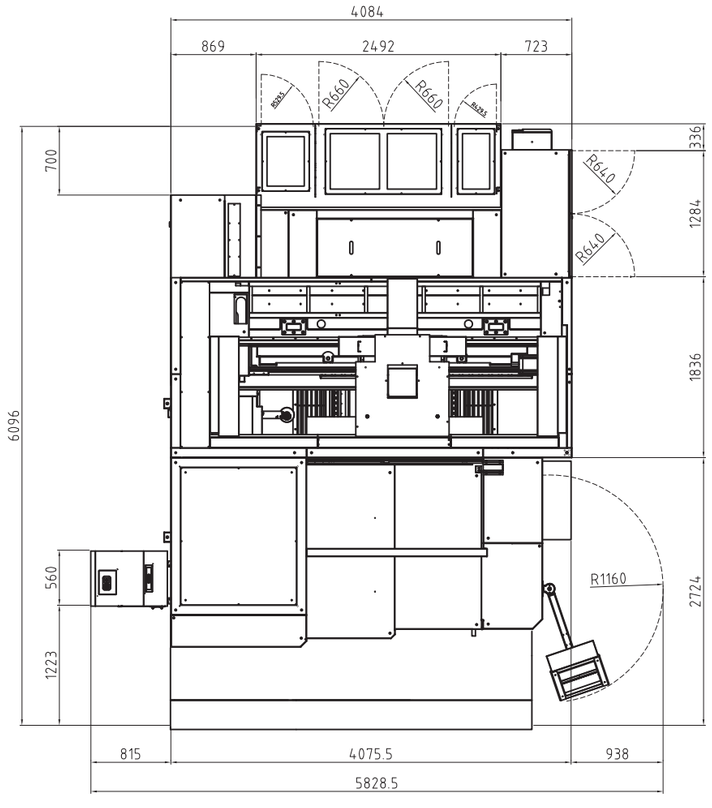
4084
869
2492
723
R660
R660
700
336
R640
R640
1284
1836
6096
560
1223
R1160
2124
815
4075.5
938
5828.5

