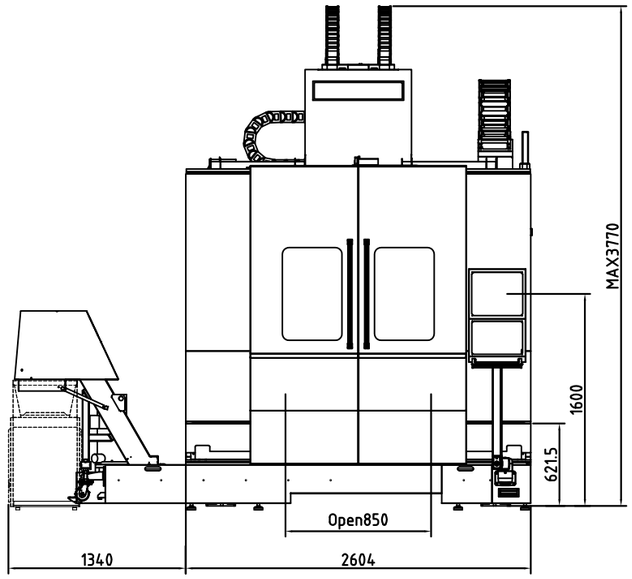
MAX3770
1600
621.5
Open850
1340
2604

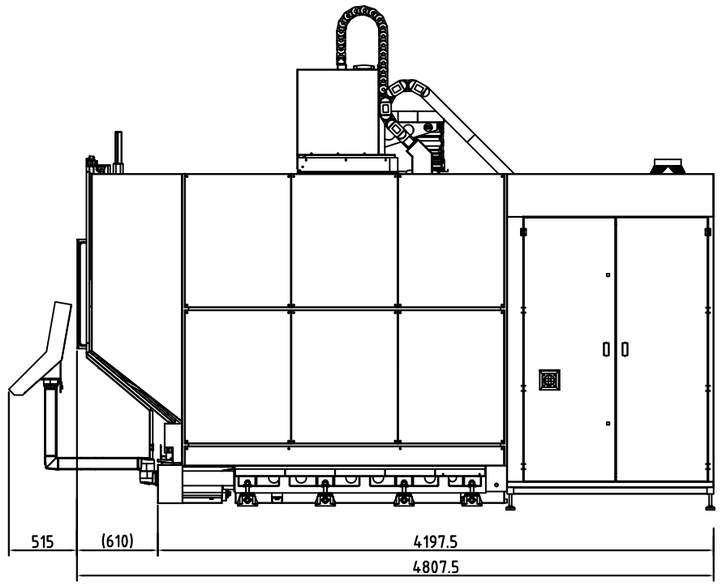
515
(610)
4197.5
4807.5

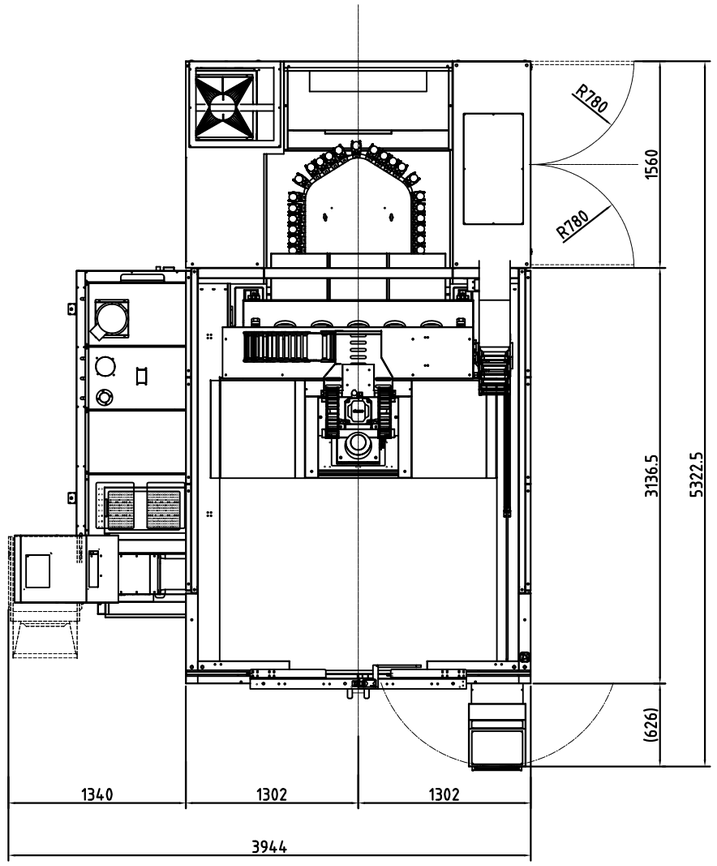
R780
R780
1560
3136.5
5322.5
(626)
1340
1302
1302
3944

