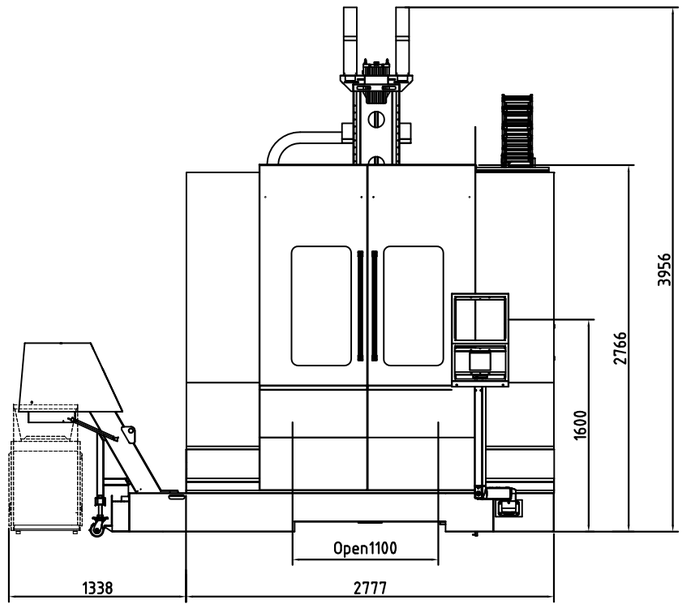
3956
2766
1600
Open1100
1338
2777

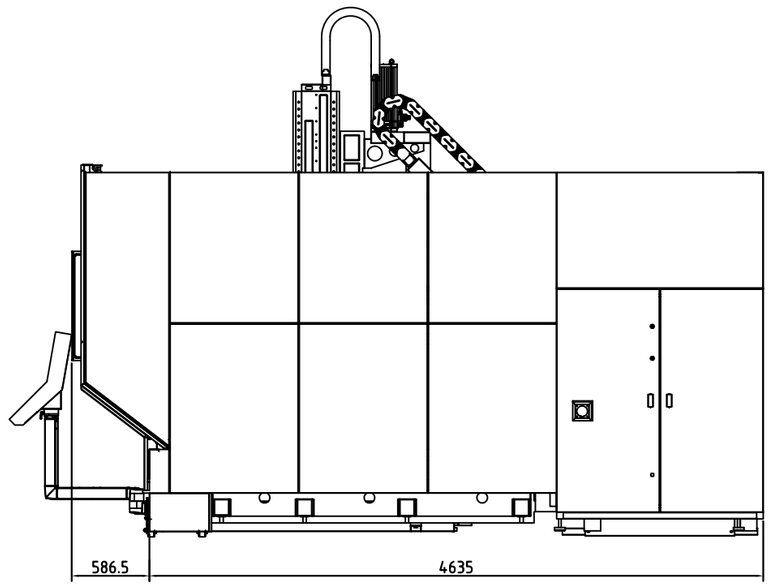
586.5
4635

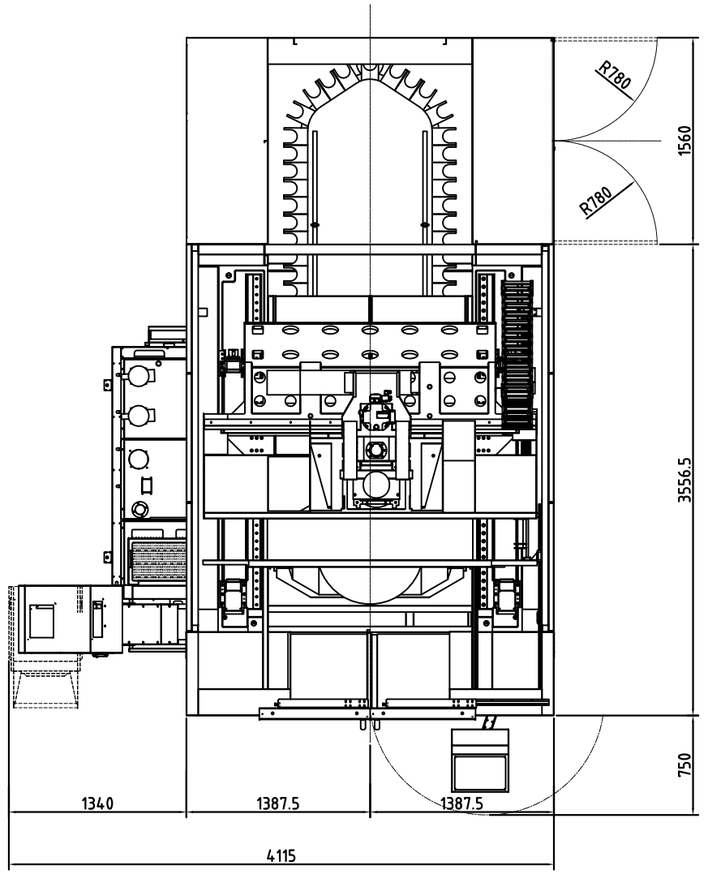
R780
R780
1560
3556.5
750
1340
1387.5
1387.5
4115

